INVITING White clip lamp *by BOHMAN AND FOLENUS*
Ref. 57315

INVITING is a family designed by Bohman&Folenius for home lighting. Its main characteristic is that the light moves to accompany you according to the different needs and moods. The head of the lamp can be adjusted both in its horizontal and vertical axis, and the light is dimmable. By sliding forward and back the top circumference, you can change the intensity of the light and by rotating the same circumference, you can change the temperature of the colour. This luminaire is designed to illuminate work tables, reading spaces or shelves, as well as bed heads.

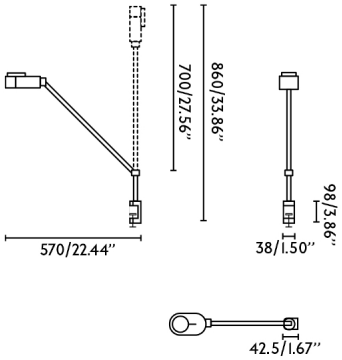

General characteristics

Fixation	Table
Type	II
IP	20
voltage	100V-240V
Hertz	50/60Hz
Cable meters	1900mm
Switch type	Slider
Upwards Vertical orientation	90
Downwords vertical orientation	90
Horizontal orientation	180
Power	6W

Material

Body/Structure	Aluminium
Diffuser	PMMA

Finish

Body/Structure	Matt White
Diffuser	Transparent

Lighting characteristics

Light source included	Yes
Adjustable colour temperature	Yes
LM	410lm
CRI	>80
Dimmable light source	YES
Light direction	Ambient lighting
Energy classification	F
Colour temperature range	2700 - 4800K

Driver

Requires Driver	Yes
Driver embedded	Yes

File download

General documents	Download >
Images	Download >
	Download >
	Download >
	Download >
	Download >
	Download >